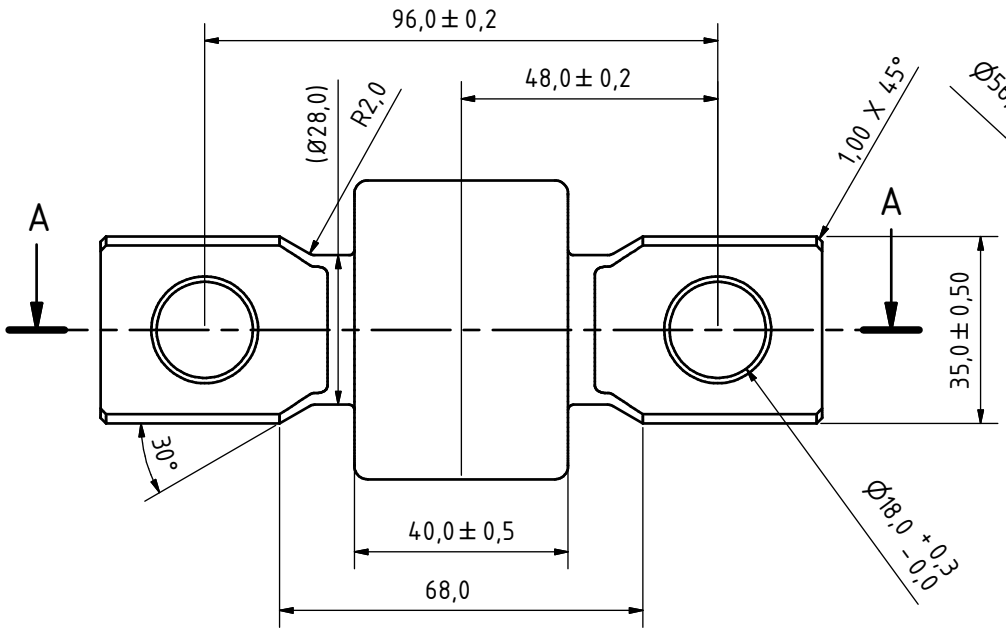

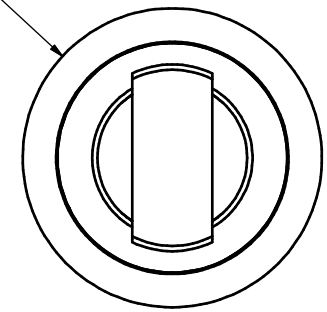

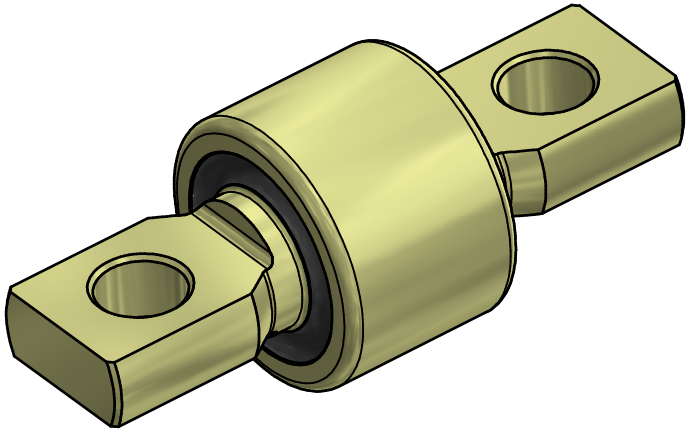

Natural Rubber
Tensile strength minimum 19 Mpa per DIN 53504
Elongation at break minimum 350% per DIN 53504
Compression set 70 C/24h max 16%

Stiffness		
Radial (kN/mm)	Conical (Nm/degree)	Torsional (Nm/degree)
35 +5%/-20%	<16@17°	<10@20°

Maximum angular movements	
Conical	Torsional
±15° (±17° Exceptional)	±18° (±20° Exceptional)

Zinc plated per ISO-2081 Fe/Zn(12-24)/C
No hexavalent chrome allowed

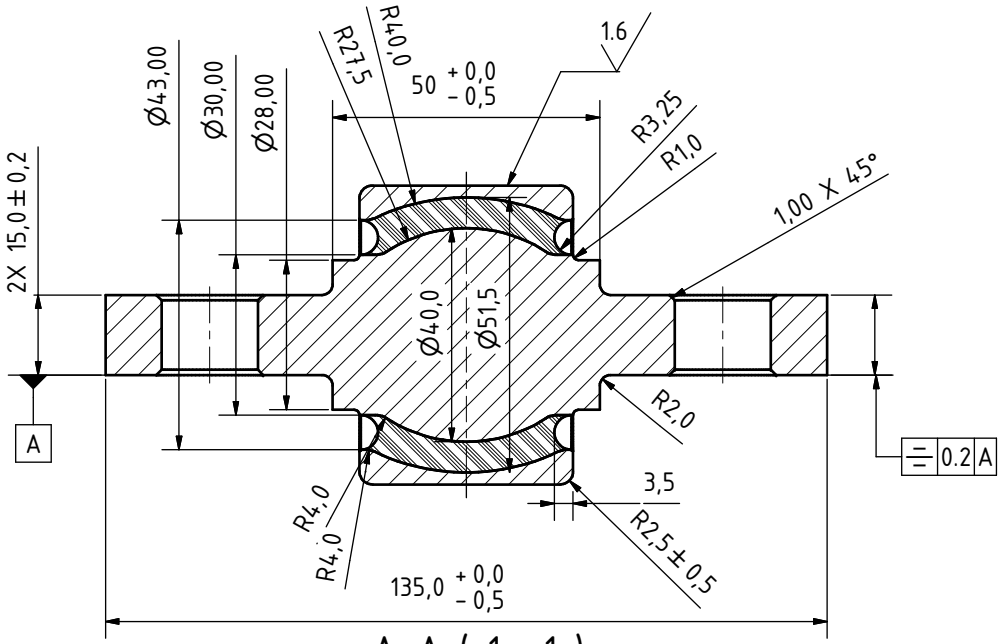

A-A (1 : 1)

YLEISTOLERANSSIT/GENERAL TOLERANCES EN 22768 m -- --	FIRST ANGLE PROJECTION !	3.2 Ra PINTA SURFACE	RAAKA-AINE Nro. / RAW MATERIAL # S355 J2 G3, St52, or Equiv
			PAINO / WEIGHT 1.054 kg
	Drw./Piirt. Chk./Trk. Appr./Hyv.		
	PIIRRUSTUS Nro: DWG #	VERSIO REV.	NIMITYS / DESCRIPTION KPT18X96D Cross bar
			1 A3
			--- ---