REVISION	A	06/30/2008	Project	NEW
DR TTL		APP DD	900186	----

NEW RELEASE

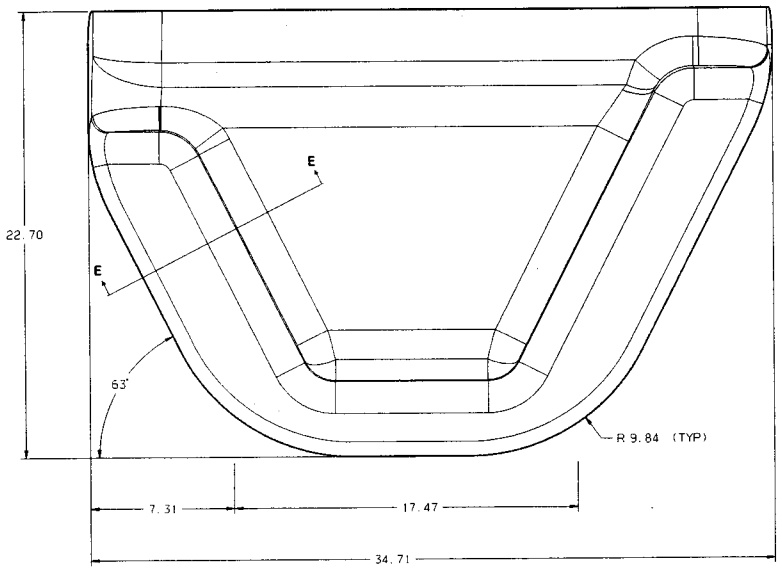

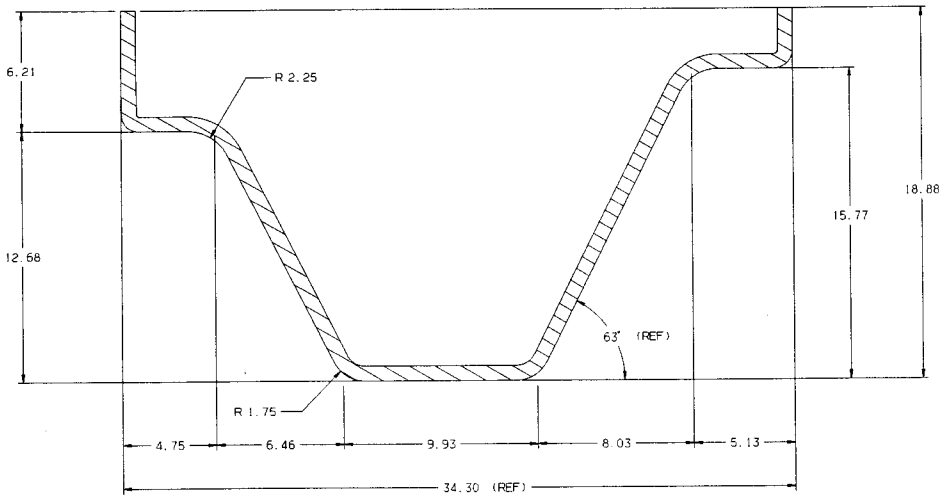

SECTION CUT B-B

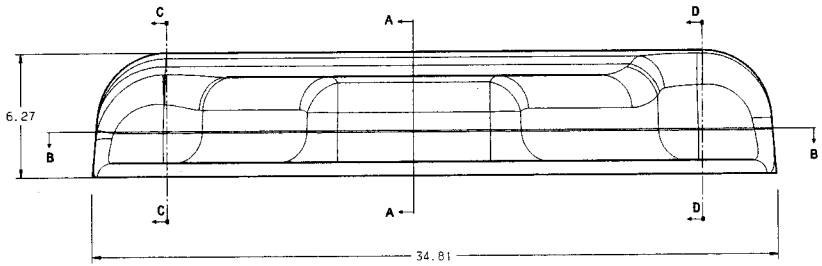

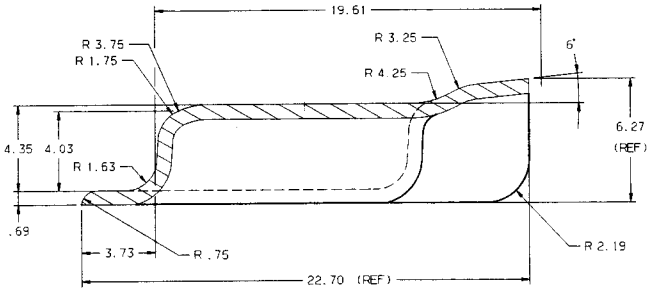

SECTION VIEW A-A

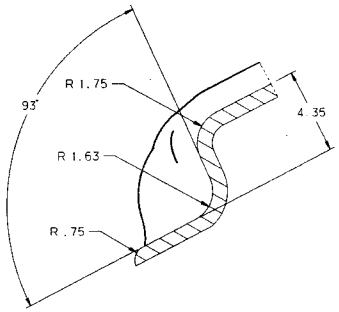

SECTION VIEW E-E

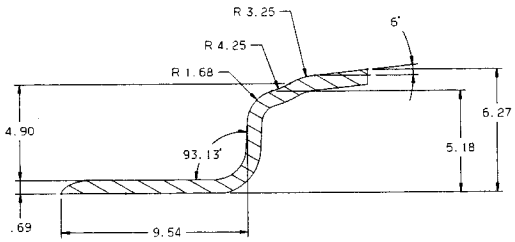

SECTION CUT C-C

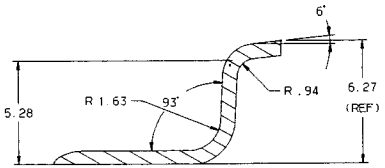

SECTION CUT D-D

NOTES:

BARRIER: EVA 13.202 PER SQ.FT.
1 LB DENSITY FIBERGLASS PER CUBIC FEET
WITH ALUMINIUM REFLECTIVE FOIL.

MATERIAL MOLDED FIBERGLASS W/BARRIER

WEIGHT: N/A

FINISH [ ] HRU [ ] FRIME [ ] PAINT [ ] OTHER
COLOR: WHITE
SPEC # _____ GLOSS % _____
NOTES:

TOLERANCE ON ALL DIMENSIONS IS PLUS (.06) OR MINUS (.06) UNLESS OTHERWISE SPECIFIED

DO NOT SCALE

INACTIVATES NOS. ——

CONFIDENTIAL
The information hereon is confidential business information and may not be copied or used for any purpose unless permission is expressly granted in writing by Blue Bird Corporation.

Copyright 2008 All Rights Reserved

IBP Industries

INSULATION, ENGINE, COVER LID

D3FE

SCALE 0.3:1

REV A

DR 06/30/08	BY TTL	FORMAT D	00125159	SHEET 1/1
APP 06/30/08	BY DD			

REVISION	A	04/24/2008	Project	Web
DR TTL		APP (2)	8000183	XXX

NEW RELEASE

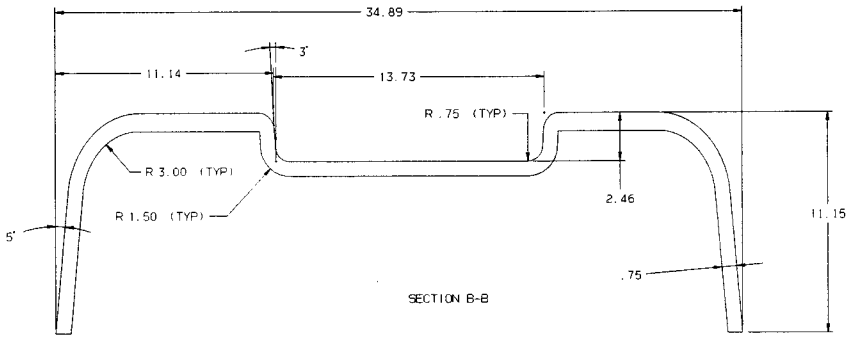

SECTION B-B

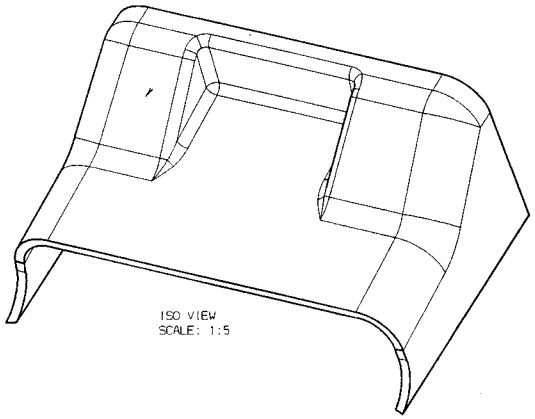

ISO VIEW
SCALE: 1:5

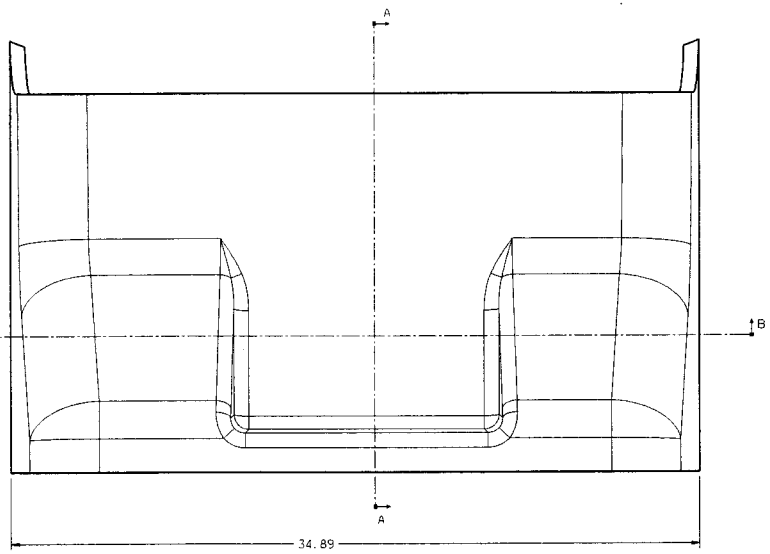

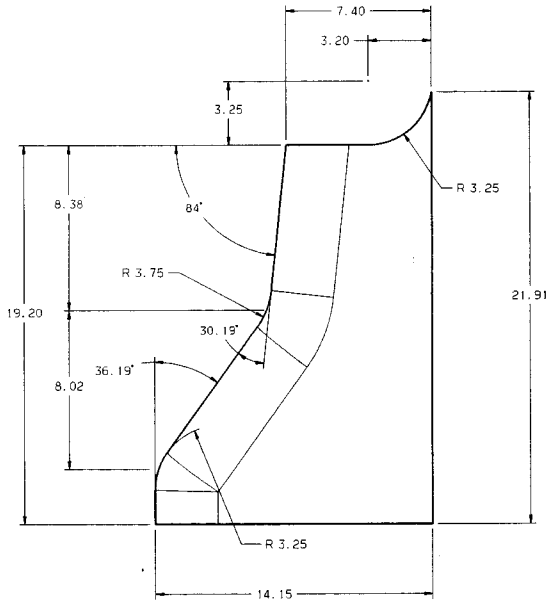

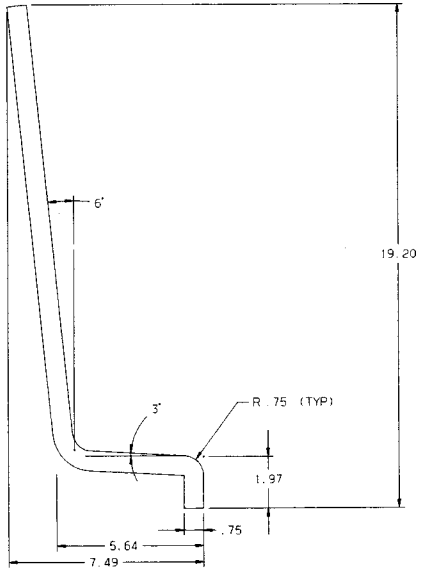

SECTION A-A
SCALE: 2:5

NOTES:
BARRIER: EVA 13.202 PER SQ.FT.
1LB DENSITY FIBERGLASS PER CUBIC FEET
WITH ALUMINUM REFLECTIVE FOIL.

MATERIAL None

WEIGHT: N/A

FINISH [ ] RAW [ ] PRIME [ ] PAINT [ ] OTHER
COLOR: NAME _____
SPEC # _____ GLOSS # _____
NOTES:

TOLERANCE ON ALL DIMENSIONS IN PLUS [ ] OR MINUS [ ] UNLESS OTHERWISE SPECIFIED

DO NOT SCALE

INACTIVATES NOS. ——

CONFIDENTIAL
The information hereon is confidential business information and may not be copied or used for any purpose unless permission is expressly granted in writing by Blue Bird Corporation.

Copyright 2008 All Rights Reserved

IBP Industries

INSULATION, ENGINE, COVER SHELL. D3FE

DR	04/24/08	BY	TTL
APP	04/24/08	BY	DD

FORMAT D

00125548

SCALE 0.3:1

REV A

SHEET 1/1