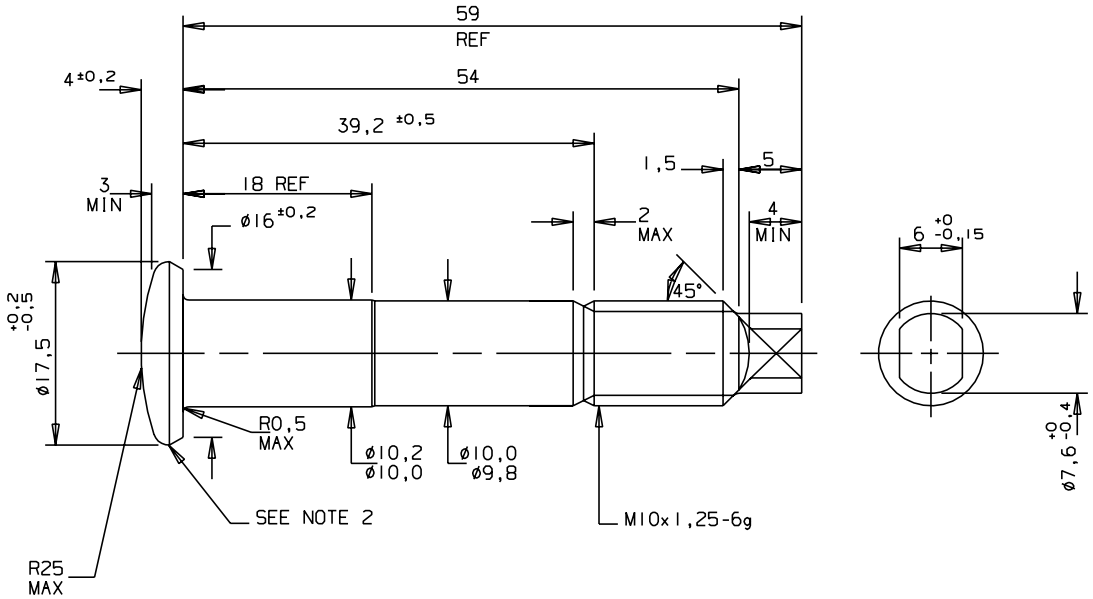

NOTES:

1. COMPONENT TO BE FREE FROM BURRS AND SHARP EDGES.
2. NATURAL FLOW OF MATERIAL.

-	F1867	11/03/04	
FINAL RELEASE			
-	P1867	19/10/99	
PILOT RELEASE			
REF.	EC No.	DATE	APP
DESCRIPTION			
REVISIONS			

DRAWN BY: E BONI	DATE: 19/10/99
APPROVED BY:	DATE:
SCALE: 2:1	DO NOT SCALE
PROJECTION:	DIMENSIONS IN mm UNLESS OTHERWISE STATED.

TOLERANCES:

GENERAL ±0,25
ANGULAR ±1°

MATERIAL:

COLD FORMED - EN2A

TREATMENT/FINISH:

RUST PROTECT TO SPEC AH3/2

DESCRIPTION:

STUD SHANK

COMPUTER No. 3491299009

DWG. No. 91299009

ARMSTRONG

COPYRIGHT THIS DRAWING IS THE PROPERTY OF ARMSTRONG HYDRAULICS SOUTH AFRICA (PTY.) LTD INFORMATION SHOWN MAY NOT BE DIVULGED TO ANY THIRD PARTY WITHOUT WRITTEN CONSENT.

ANY MODIFICATIONS TO THIS DRAWING MUST BE MADE ON CAD