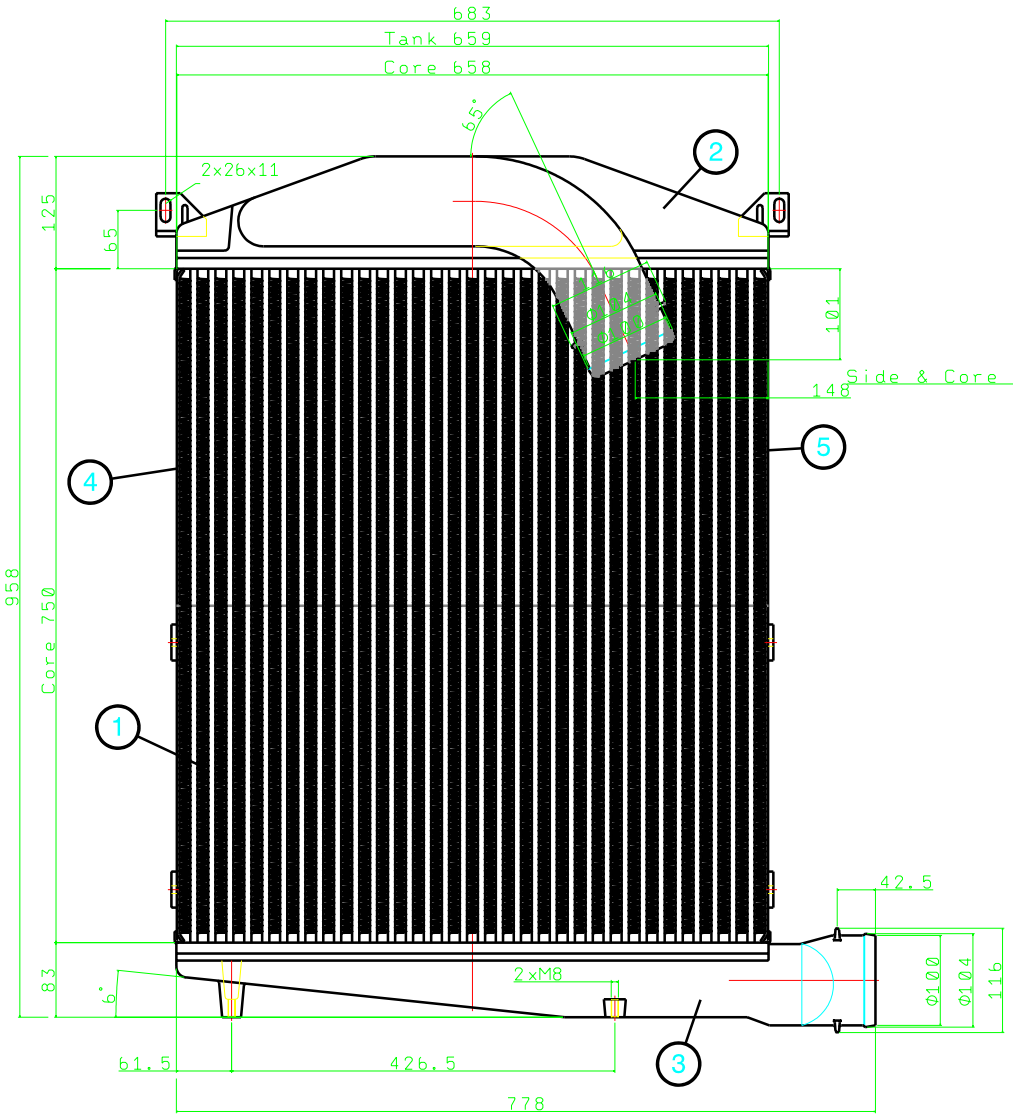

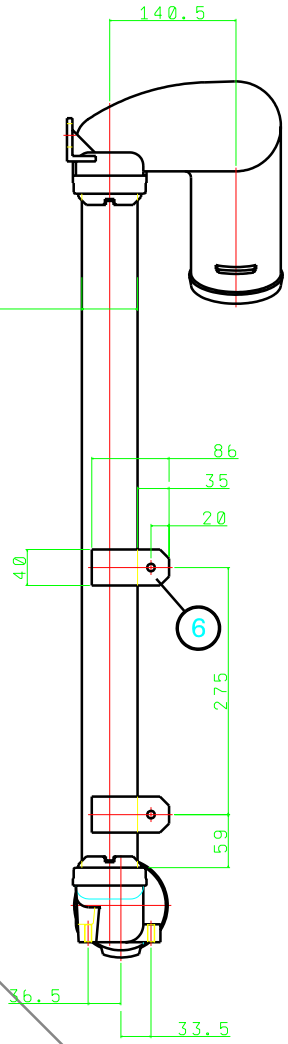

FIN TYPE:CORRUGATED/LAW(1ROW)
NUMBER OF TUBE:32
NUMBER OF FIN:33
NUMBER OF SLOTS:32
PITCH IN WIDE:-
PITCH IN LENGHT:20
TUBE SIZE:62x8
FIN SIZE: 730x62
F.P.I:8

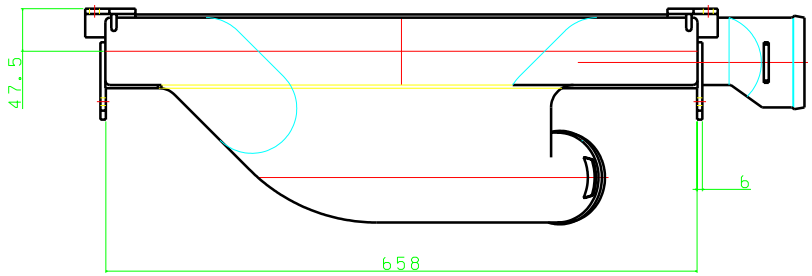

No.	DESCRIPTION	SIZE	MATERIAL	QTY.	UNITE WG. (Kg)	TOTAL WG. (Kg)
6	Fastener	-	AL.	4	-	-
5	R-Side Plate	-	AL.	1	-	-
4	L-Side Plate	-	AL.	1	-	-
3	Lower Tank	-	AL.	1	-	-
2	Upper Tank	-	AL.	1	-	-
1	Core	-	AL.	1	-	-

REV.	DESCRIPTION	BY	CHECKED	DATE
0	For Construction			

DESIGNED BY	
DRAWN BY	M.AliHoseini
CHECKED BY	M.AliHoseini
APPROVED BY	-
DATE	88/04/09
TOLERANCE	DIN 7168(m)

distant / tol. degree	0.5 3	3 6	6 30	30 120	120 400	400 1000	1000 2000
f	±0.05	±0.05	±0.1	±0.15	±0.2	±0.3	±0.5
m	±0.1	±0.1	±0.2	±0.3	±0.5	±0.8	±1.2
g	±0.15	±0.2	±0.5	±0.8	±1.2	±2	±3
sg	-	±0.5	±1	±1.5	±2	±3	±4

QTY. -
FILE NAME :
ISO.

SCALE. 1:6
SIZE. A3
UNIT WEIGHT : -

MATERIAL. : ---
ORDER NO. :
PROJECT NAME : C457 Inter Cooler
TITEL : -
DWG. No. : MP-IC-1396-00-00-00
SHEET 1 OF 1

____jD j_QC