SYM	ECN	DESCRIPTION	DATE	APP	CHD	DRN

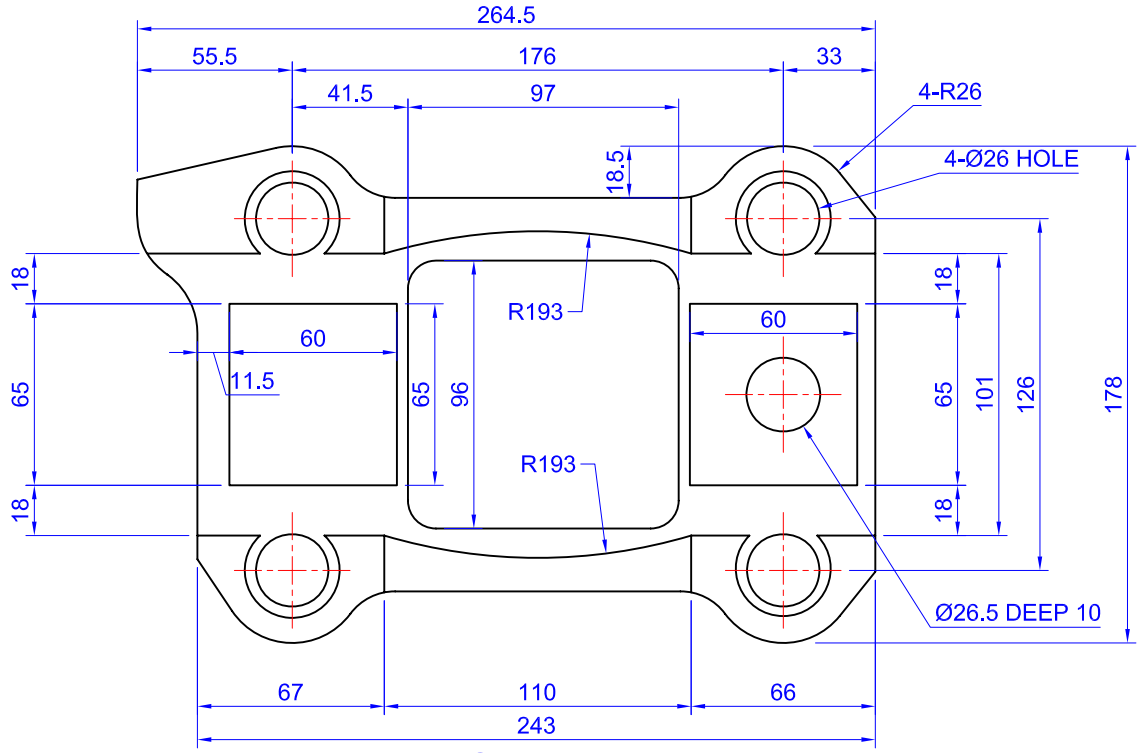

TOP VIEW

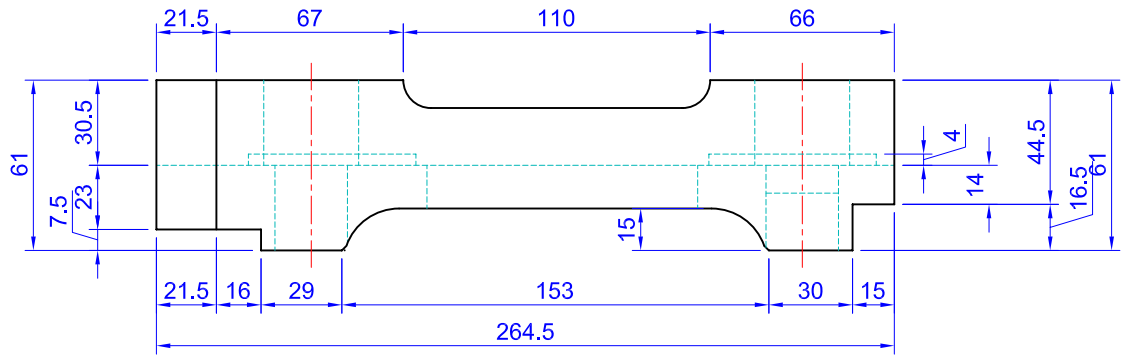

FRONT VIEW

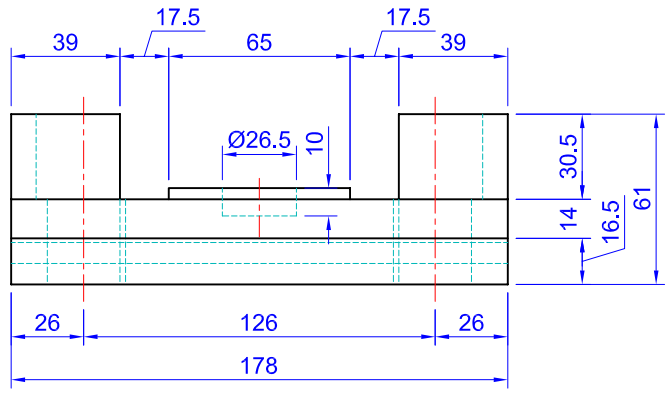

SIDE VIEW

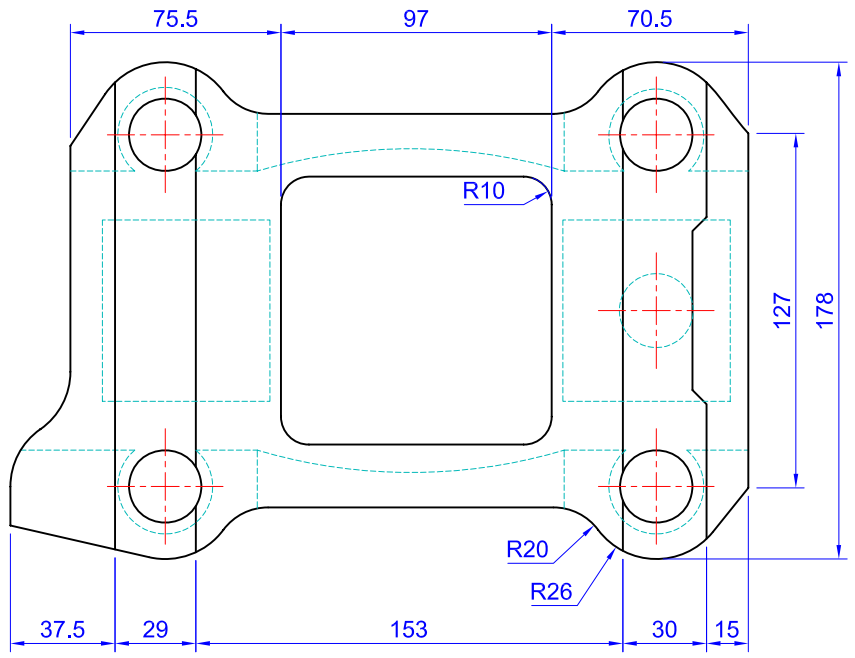

REAR VIEW

NO	PART NO.	PART NAME	MAT	QTY	REMARKS

DATE	16.02.2009
APP BY	Richard
CHD BY	Aejaz
DRN BY	XYZ

GEN, ALOW, TOLERANCE,

DIM CLASSIFICATION	MACHINING	MANUFAC,
1 - 30	±0.5	±1.0
31 - 120	±0.8	±1.5
121 - 315	±1.2	±2.0
316 - 1000	±2.0	±3.0
1001 - 2000	±3.0	±4.0
2001 - 4000	±4.0	±6.0

TITLE:-
SPRING CLAMP RIGHT
AXEL SHEHILI

MODEL:.
PERABOLIC

DWG NO.
SH-AC-09-1005

REF, DWG.

SCALE	T.W.	MAT. SIZE. SPEC.
1:--	1:--	CAST IRON

NOTE:- THIS DRAWING IS THE PROPERTY OF AL-SHEHILI FACTORY
IT CONTAINS CONFIDENTIAL & MUST NOT BE REPRODUCED ,COPIED OR USED
FOR ANY PURPOSE WITHOUT THE WRITTEN PERMISSION OF AL- SHEHILI FACTORY.